Borges
FOREIGN AUTO PARTS, INC.
2200 Lewis Street ~ Dighton, MA 02715
Phone: 508-669-6288 Fax: 508-692-2493

2-DOOR UNIBODY

Date: _____

To: _____ From: _____

Contact Person: _____ Contact Person: _____

Phone #: _____ Fax #: _____

Year: _____ Make: _____

Model: _____ VIN #: _____

P.O. #: _____ Build Date: _____

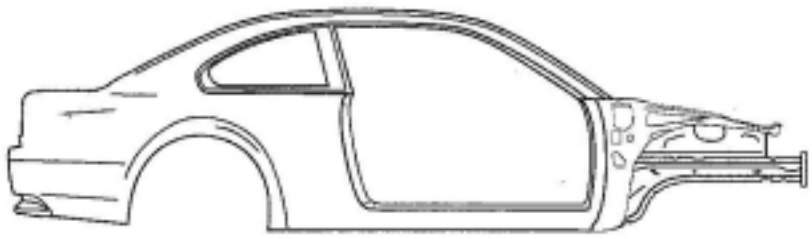

PASSANGER SIDE

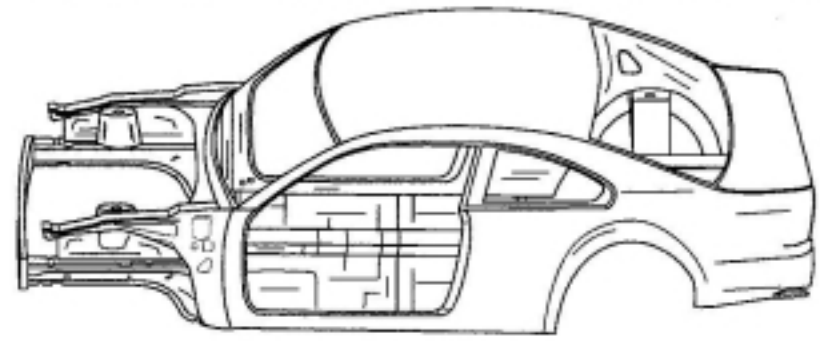

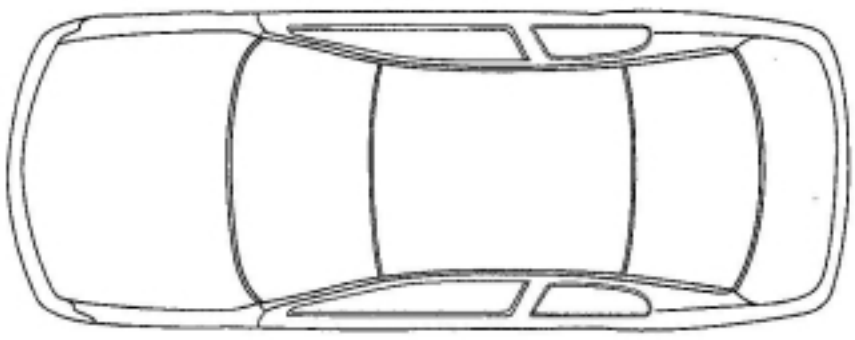

TOP VIEW

Please use the area below for a detail of cut instructions:

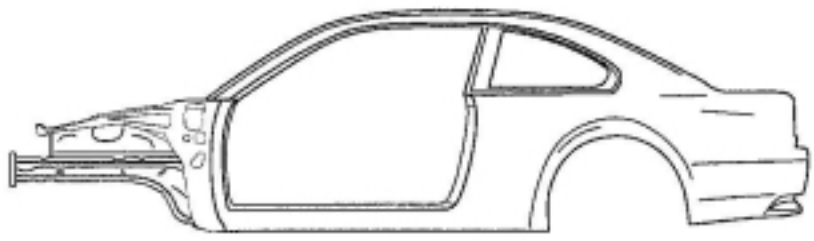

DRIVER SIDE

Notes:

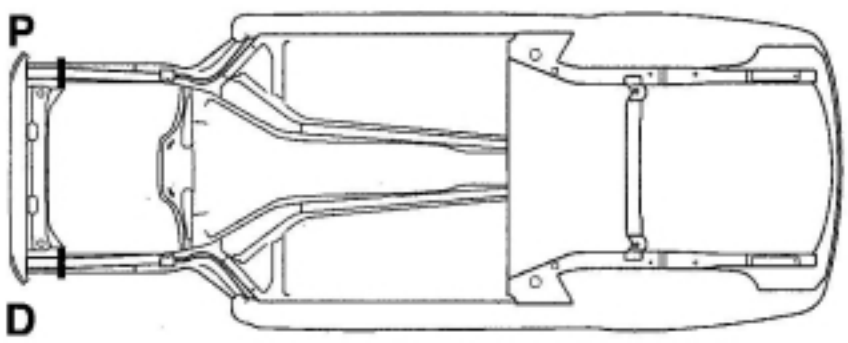

TOP VIEW